Optima 217 Plus

Product summary

Optima

ClearThinking

Optima 217 plus

Product summary

Product facts

- Minimal double glazed system
- Dry jointed and fully demountable
- Aluminium framework
- Unique hidden mullion within glazing cavity
- Can incorporate integral blinds
- Numerous door options
- Manufactured at Optima's UK factory in Bath

Acoustics

- Maximum tested acoustic rating of Rw43dB using 6.4mm acoustic laminated glass + 10.8mm acoustic laminated glass

Deflection

- Can accommodate up to +/-25mm deflection

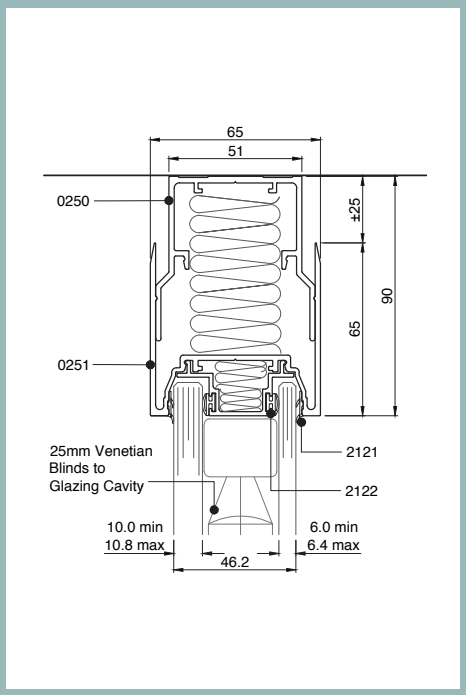

Double glazed head track ±25 deflection with blinds to glazing cavity

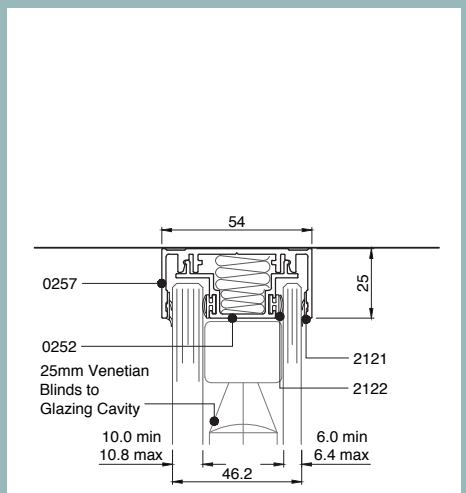

Double glazed head track with blinds to glazing cavity

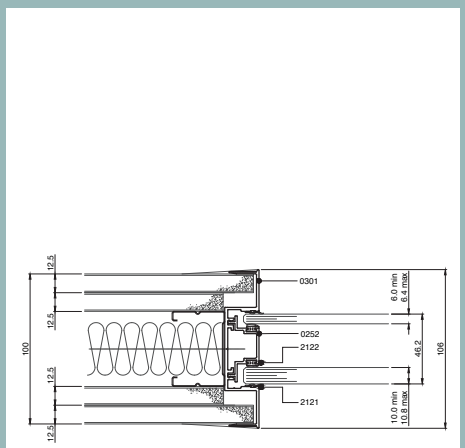

Tapeable glazing bar double glazed, double boarded

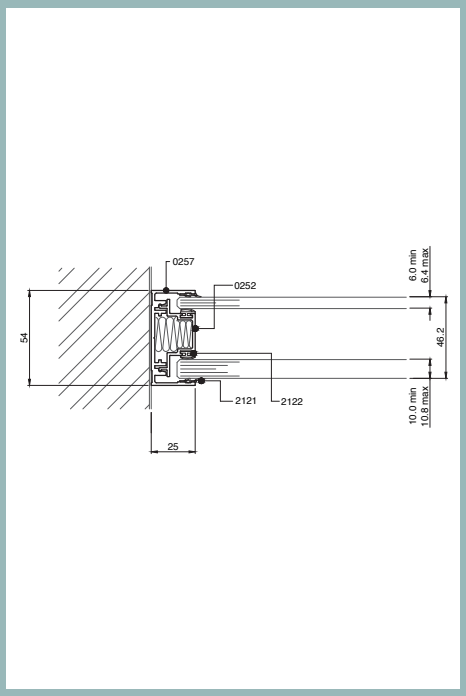

Double glazed wall abutment

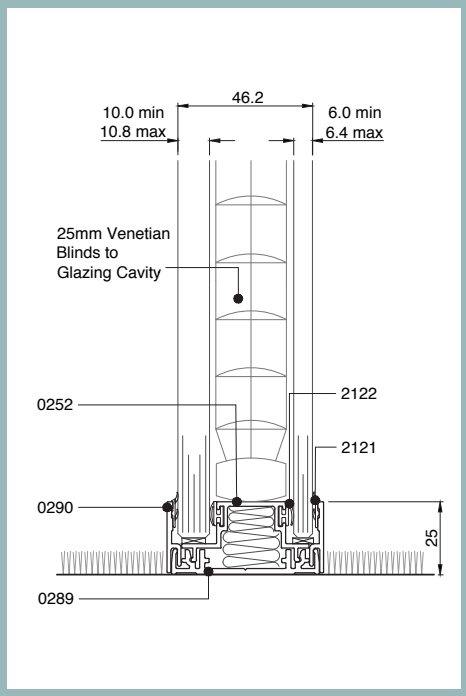

Double glazed floor track with clip-in bleed, blinds to glazing cavity

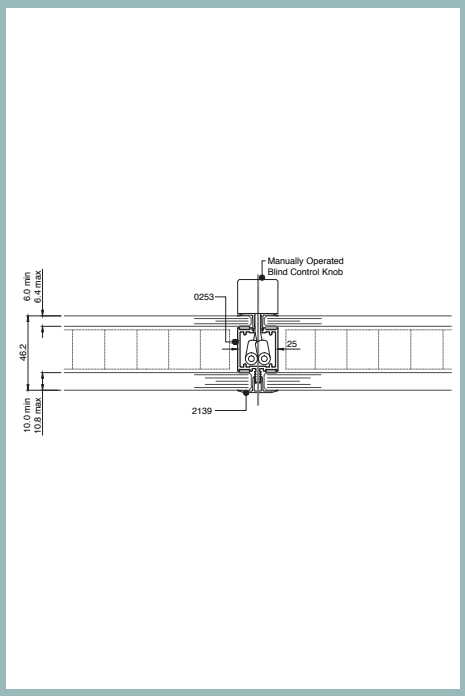

Double glazed hidden mullion with blind control knob

Product overview

System type	Double glazed
Head detail	Standard aluminium head channels 54mm x 25mm
Base detail	Standard aluminium base channels 54mm x 25mm with clip-in bead
Deflection head options	2-part internal deflection head: +/-25mm – 65mm deep aluminium outer channel
Door head detail	Head clip available for deflection and non-deflection glazing channel to accept door leaf
Door options	Compatible with Axile Clarity, SG/DG Edge Symmetry, SG/DG Edge Affinity, 44mm/54mm timber door
Glass thickness	Minimum thickness 6mm toughened glass, maximum thickness 10.8mm acoustic laminated glass Combination of glass thicknesses subject to mullion centres, height and acoustic rating
Maximum panel size	Maximum ceiling height 3000mm, maximum mullion centres 1350mm
Glass to glass joint options	Aluminium hidden mullion within cavity with clip-in clear dry joint profile
Integral blinds	25mm slat tilt only blinds can be fitted within glazing cavity, with blind control positioned on mullion
Acoustic rating	Rw40dB – 6mm toughened glass + 10mm toughened glass Rw43dB – 6.4mm acoustic laminated glass + 10.8mm acoustic laminated glass Further test certificates available upon request

Optima

Optima Partitions LLC
Unit 1106
Level 11
Marina Plaza
Dubai Marina
United Arab Emirates

T. **Sales & Technical: 00971 45631300**
E. **Action.GCC@OptimaSystems.com**
W. **OptimaSystems.ae**